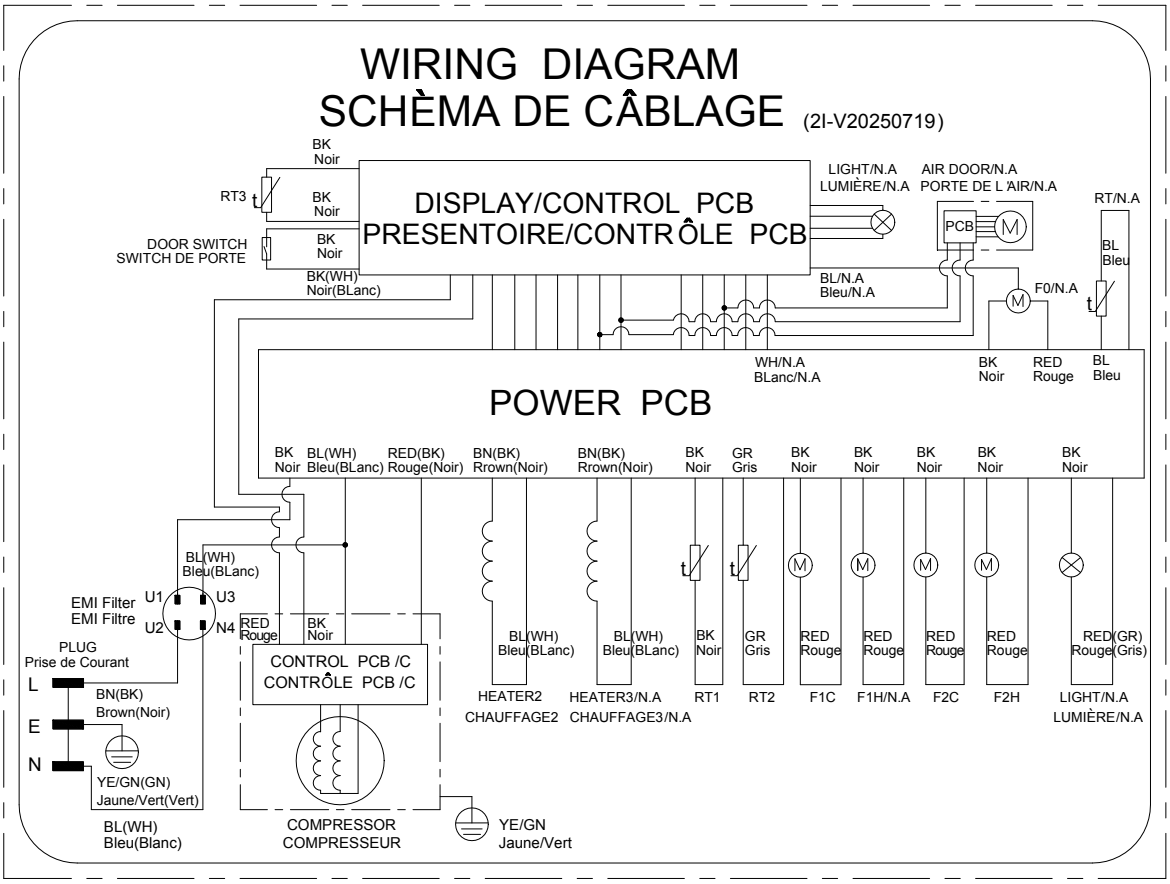FU7060-2NW (720275)