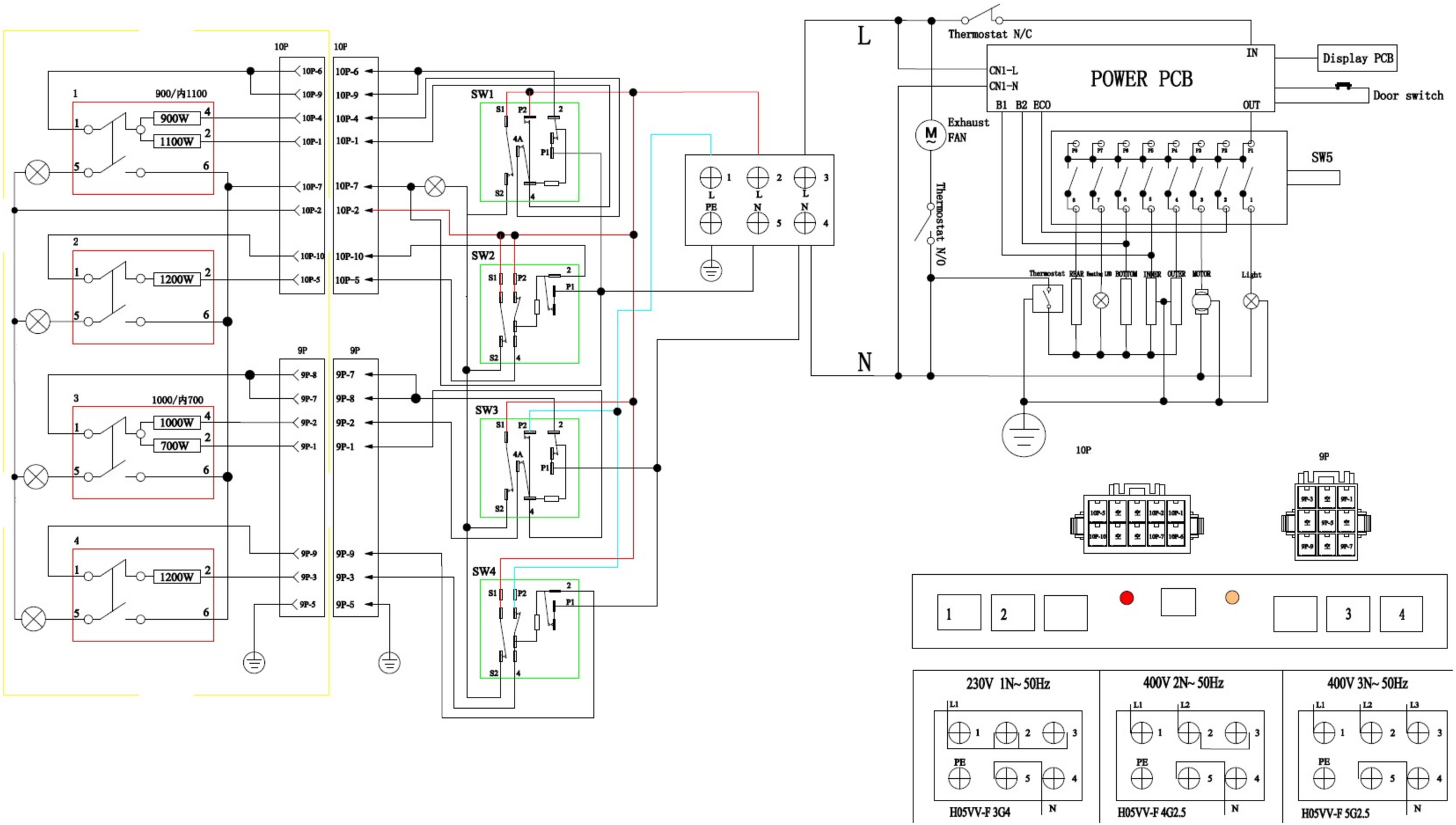
10P
900/内1100
900W
1100W
1200W
1000/内700
1000W
700W
9P
SW1
SW2
SW3
SW4
S1
S2
P1
P2
4A
L
N
PE
Thermostat N/C
Thermostat N/O
Exhaust FAN
POWER PCB
CN1-L
CN1-N
B1 B2 ECO
IN
OUT
Display PCB
Door switch
SW5
Thermostat
REAR
BOTTOM
INNER
OUTER
MOTOR
Light
230V 1N~ 50Hz
H05VV-F 3G4
400V 2N~ 50Hz
H05VV-F 4G2.5
400V 3N~ 50Hz
H05VV-F 5G2.5