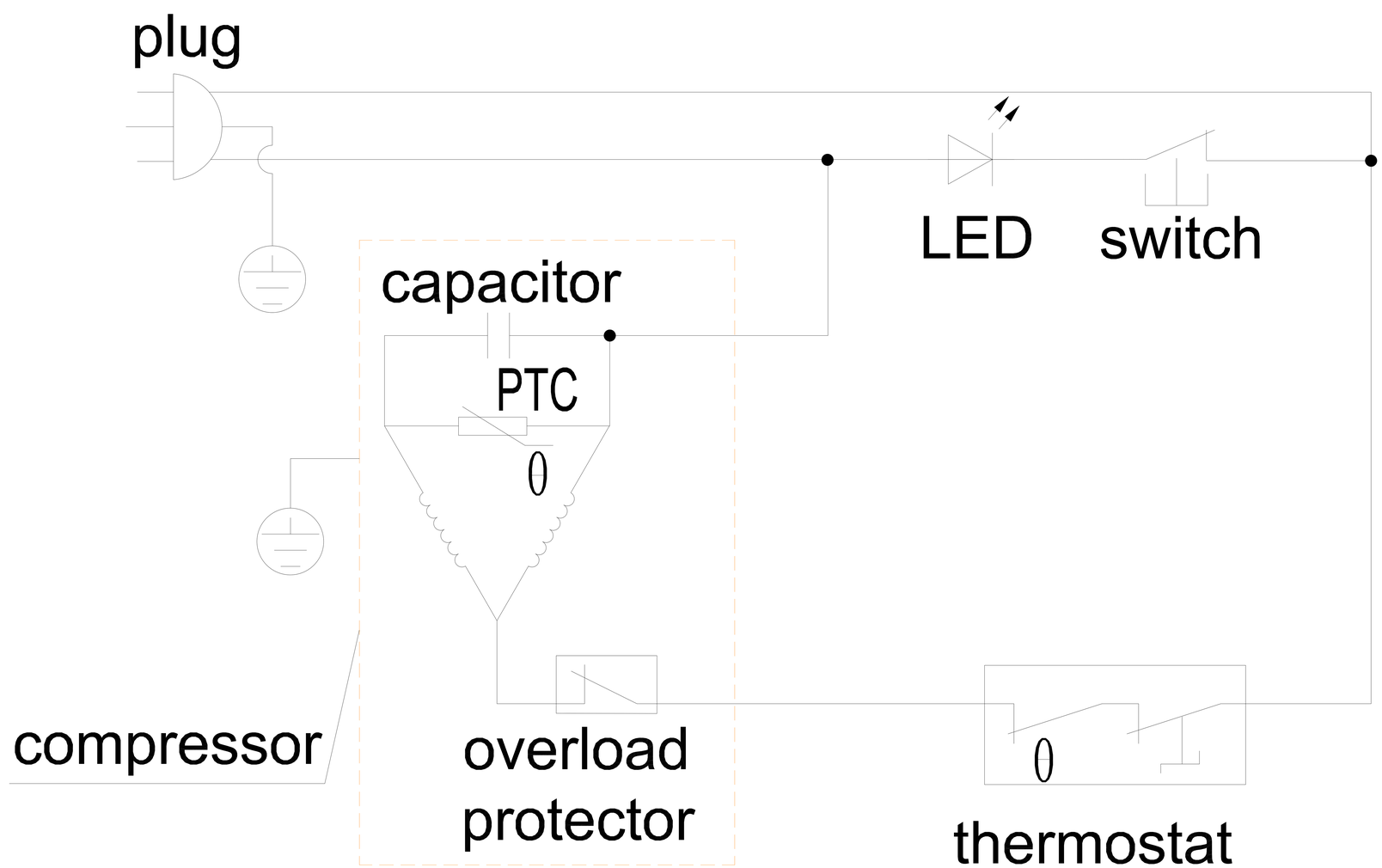
plug
LED
switch
capacitor
PTC
θ
compressor
overload
protector
θ
thermostat