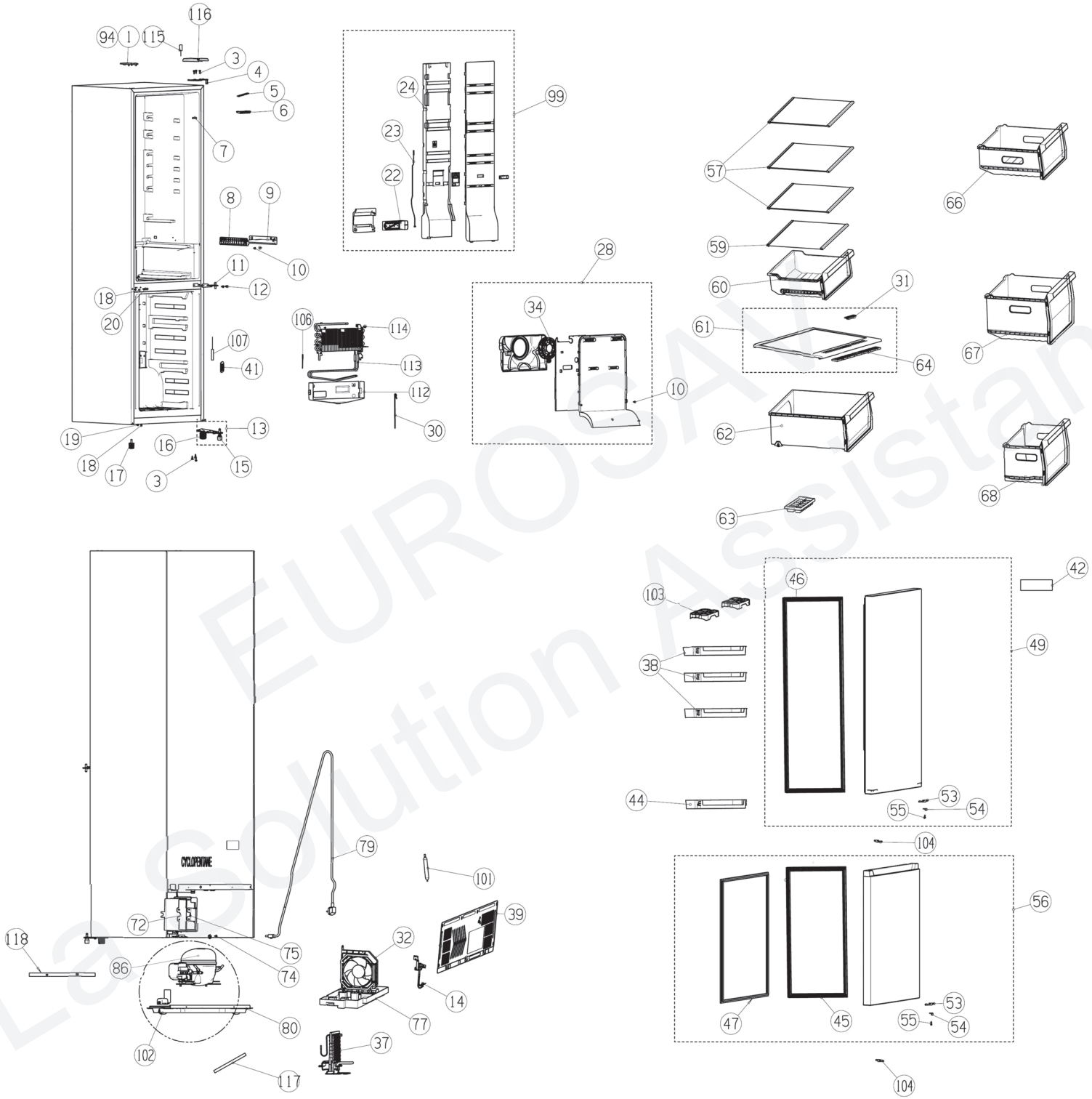

La Solution EUROSAV Assistance