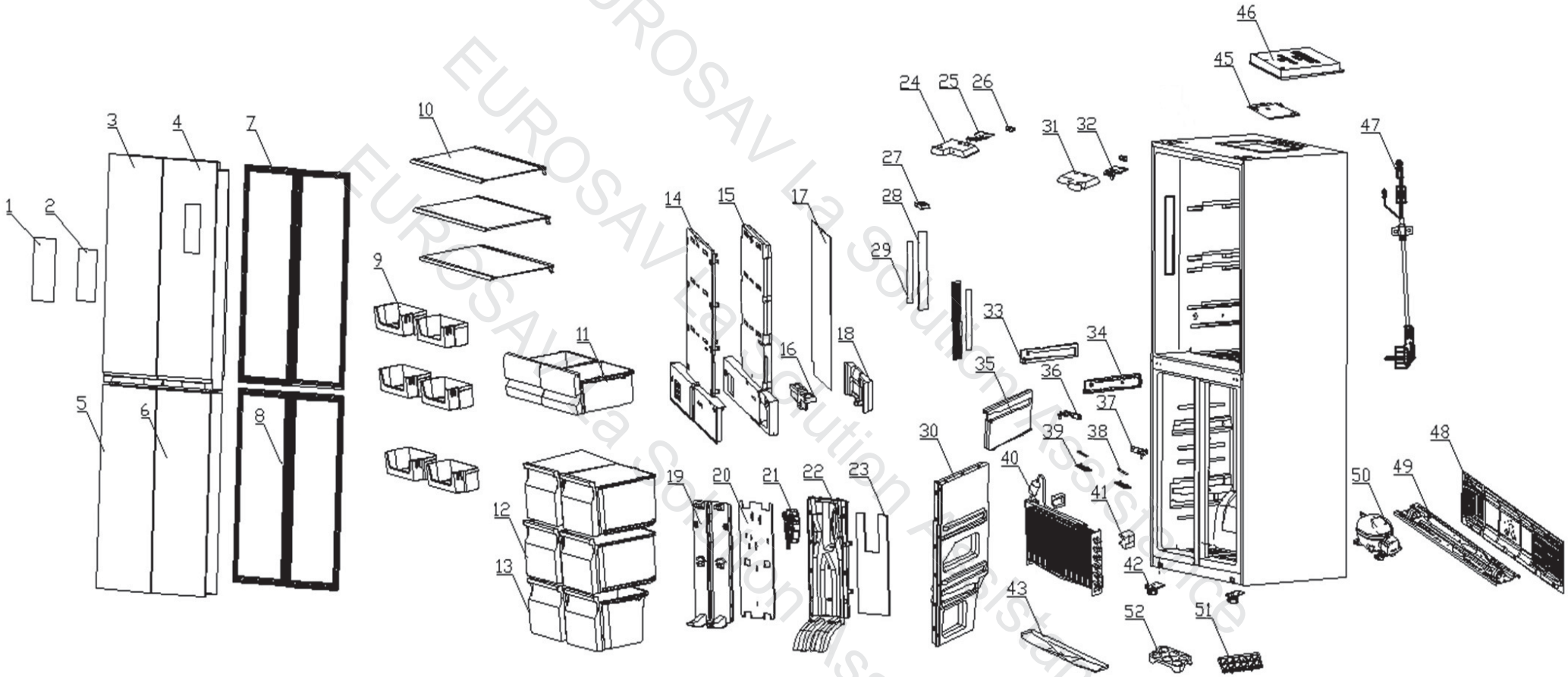

EUROSAV la solution assistance
EUROSAV la solution assistance
EUROSAV la solution assistance