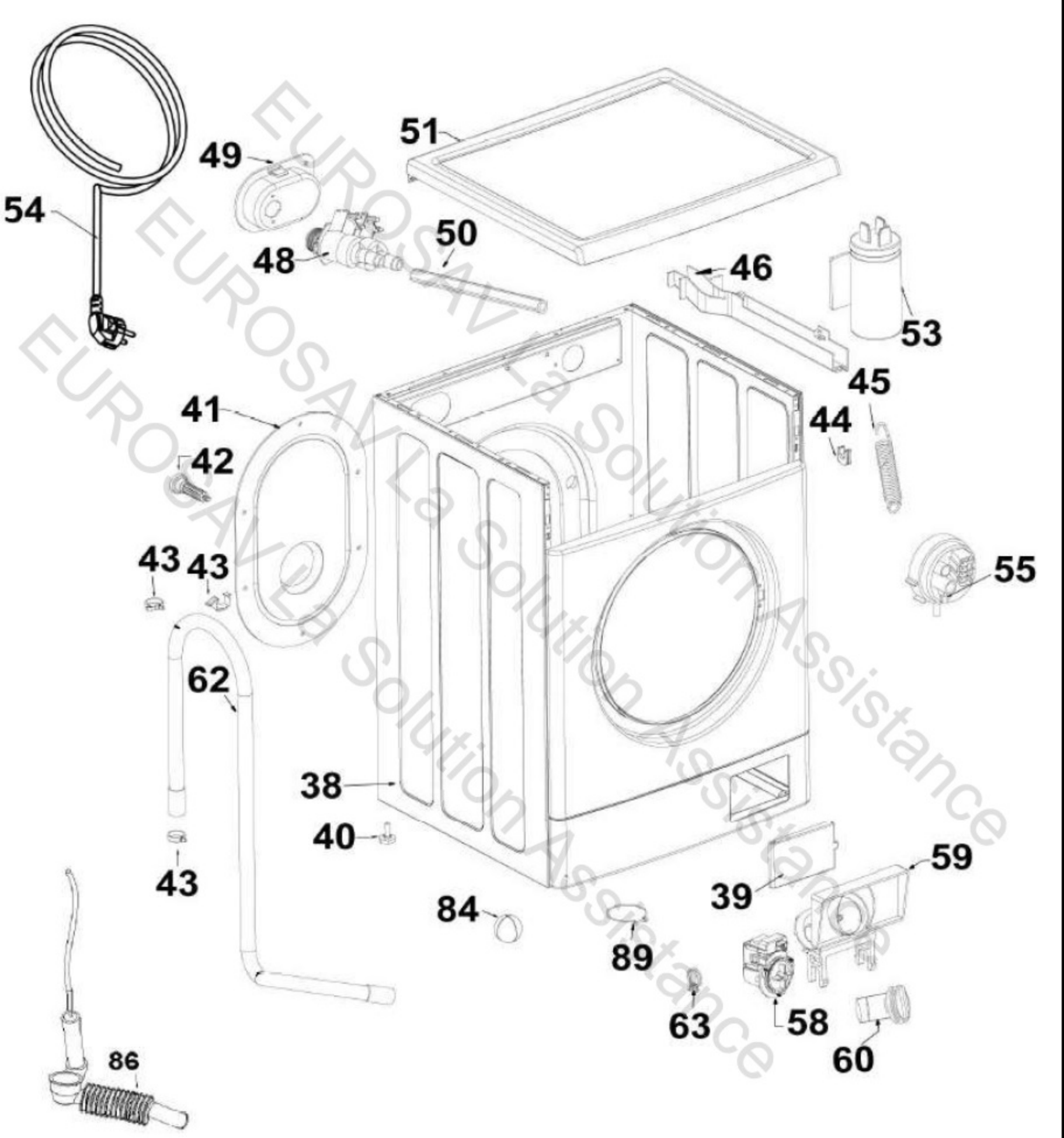

EUROSAV La solution Assistance

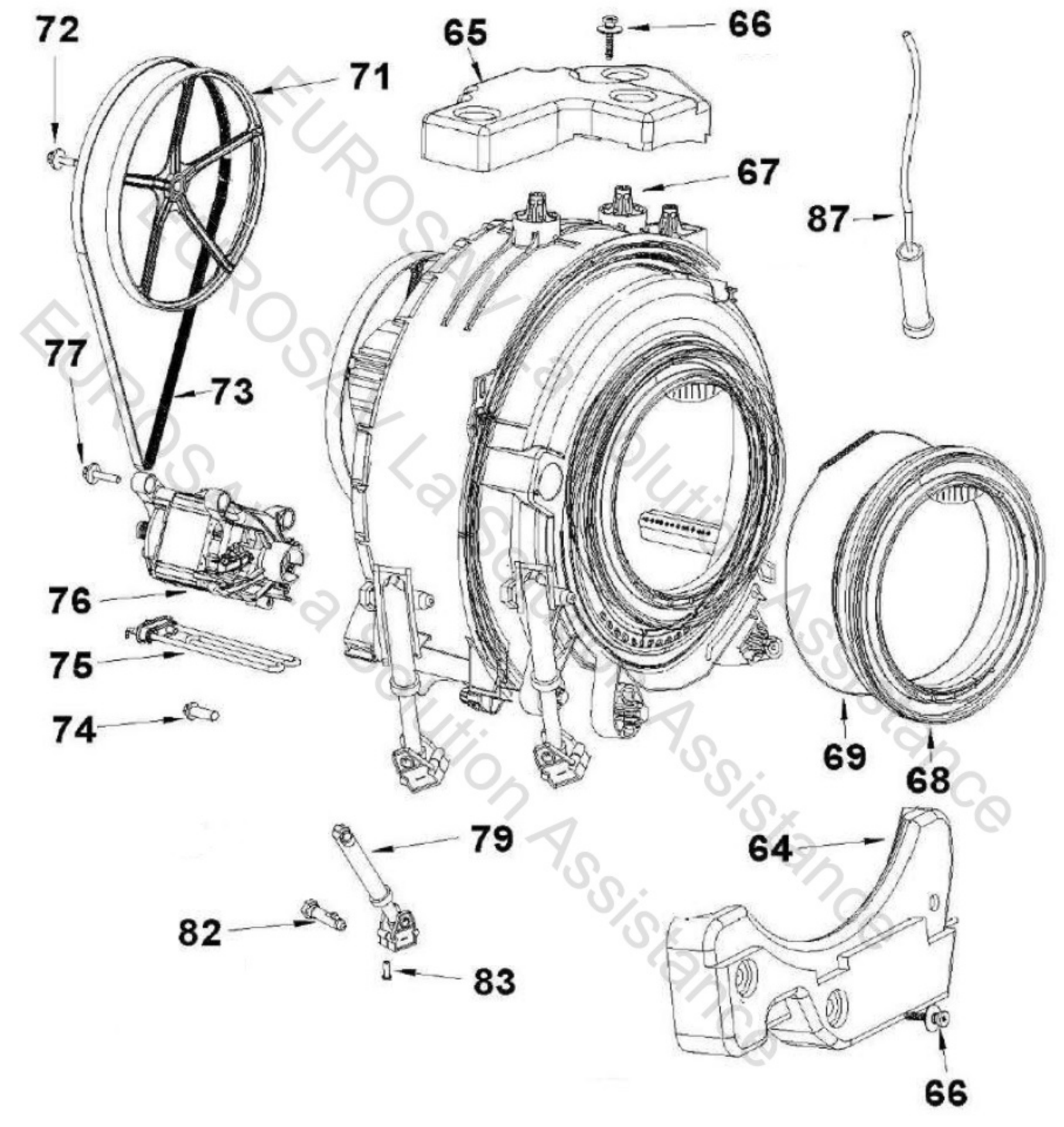

EUROSAV Le Solution Assistance
EUROSAV La Solution Assistance

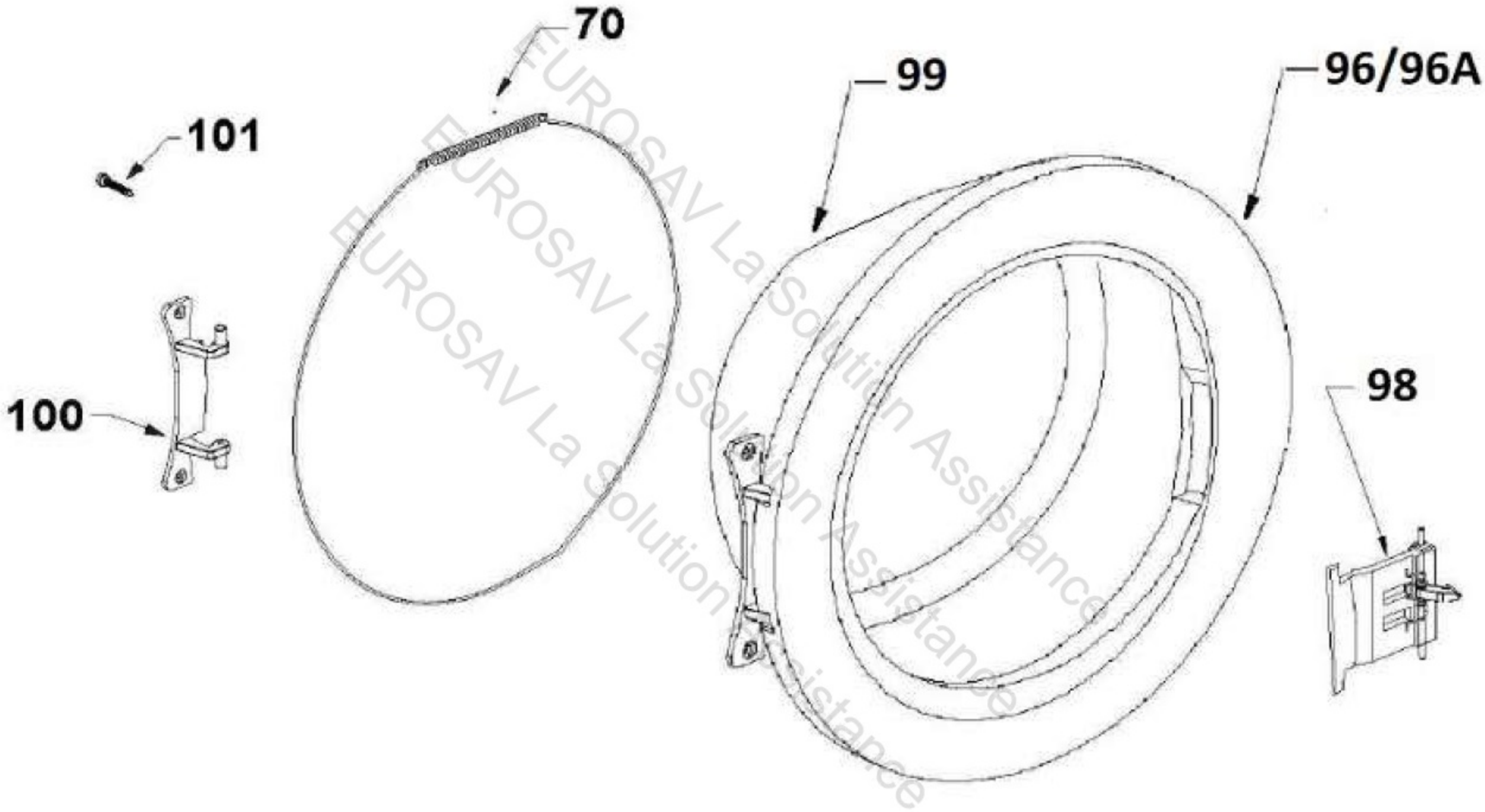

EUROSAV La Solution Assistance

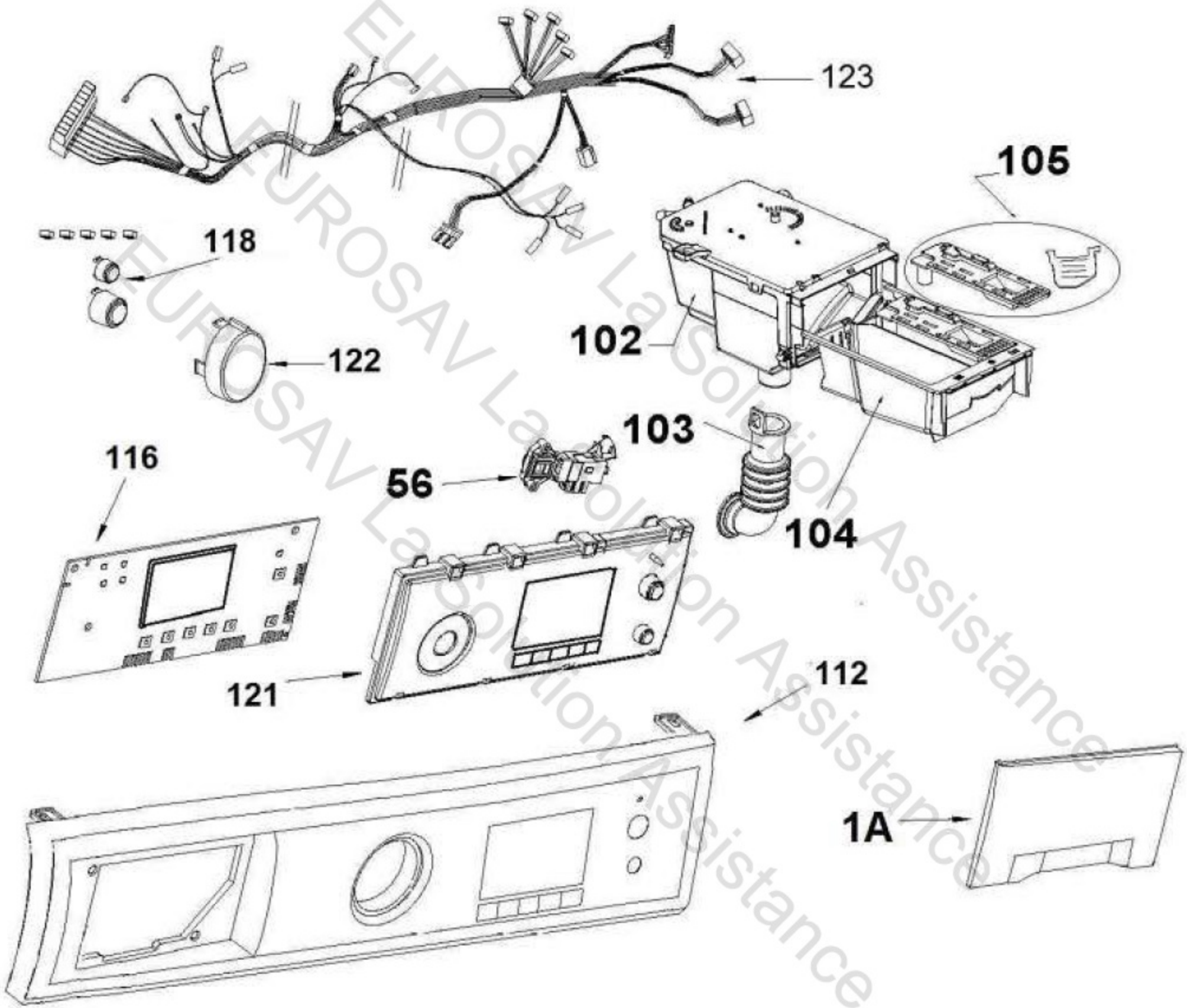

EUROSAV La Solution Assistance