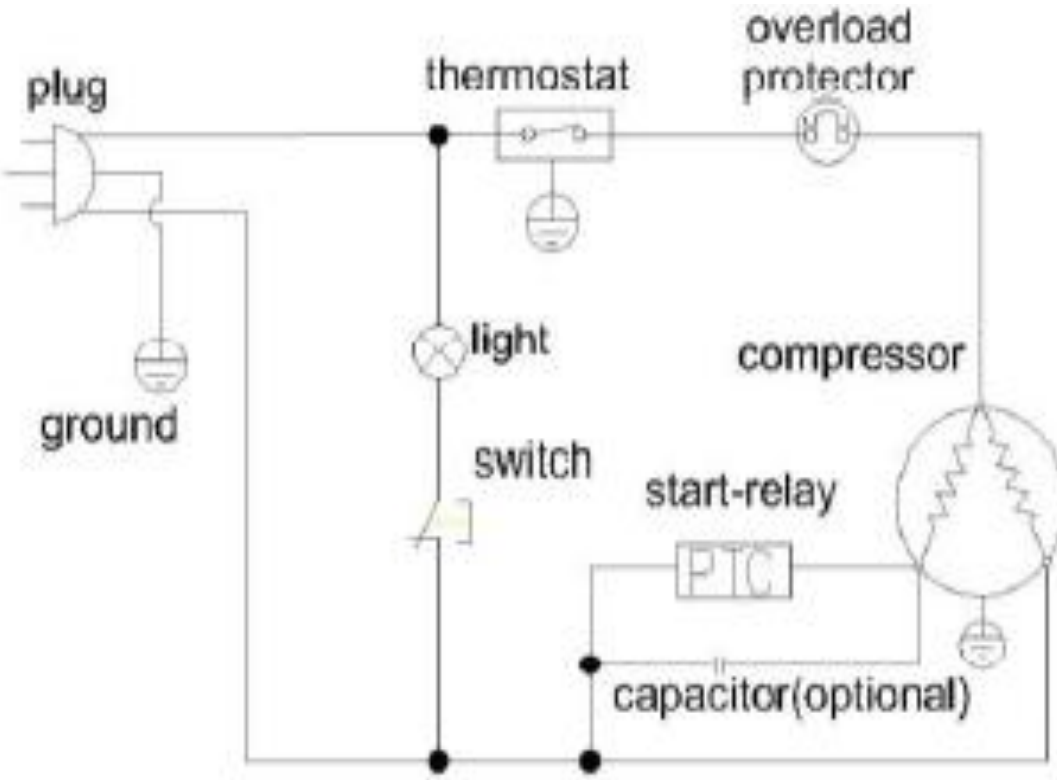
plug
thermostat
overload
protector
ground
light
compressor
switch
start-relay
PTC
capacitor(optional)