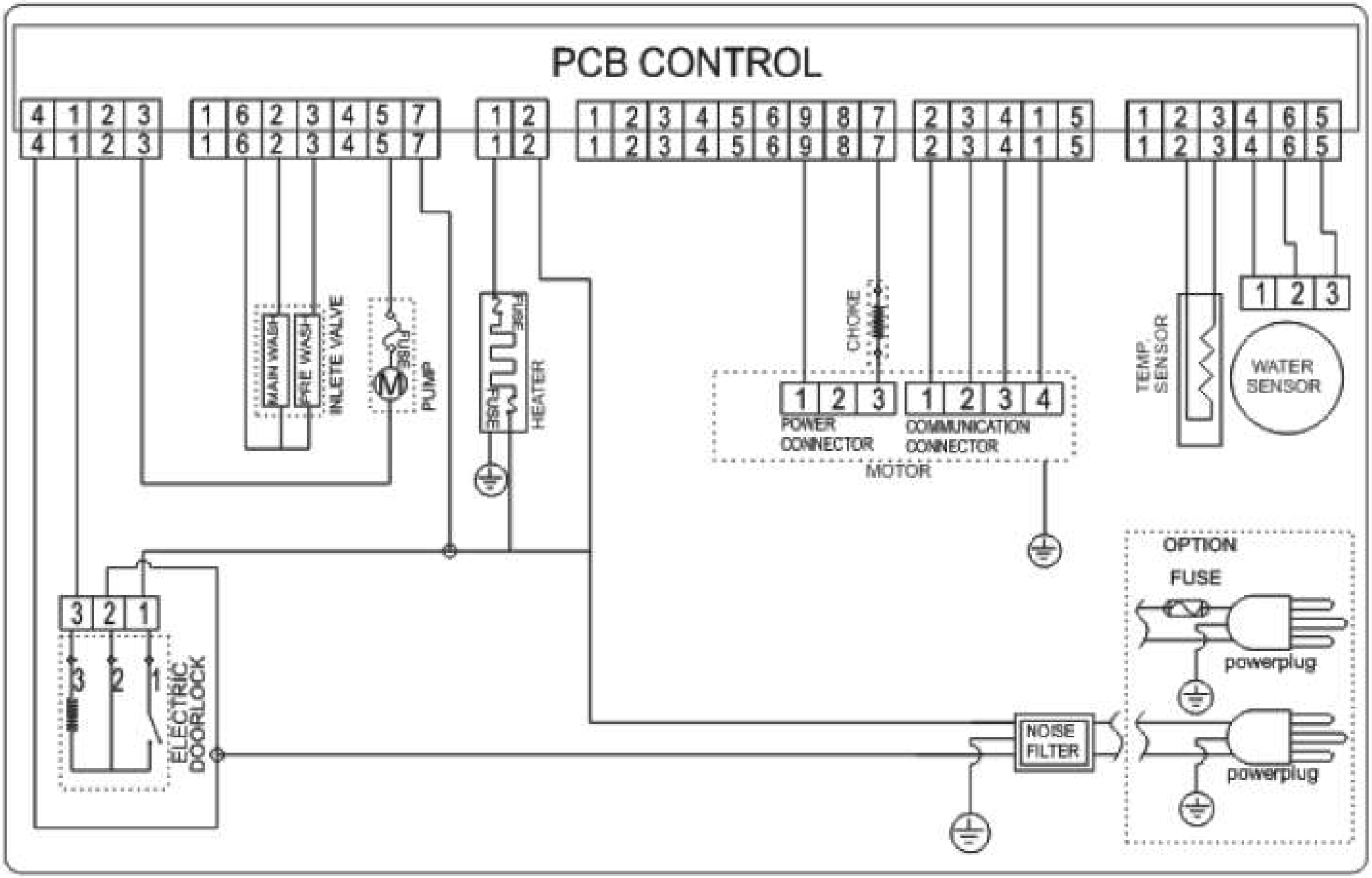
PCB CONTROL
MAIN WASH
PRE WASH
INLETE VALVE
FUSE
PUMP
FUSE
HEATER
CHOKE
POWER CONNECTOR
COMMUNICATION CONNECTOR
MOTOR
TEMP. SENSOR
WATER SENSOR
ELECTRIC DOORLOCK
NOISE FILTER
OPTION
FUSE
powerplug
powerplug