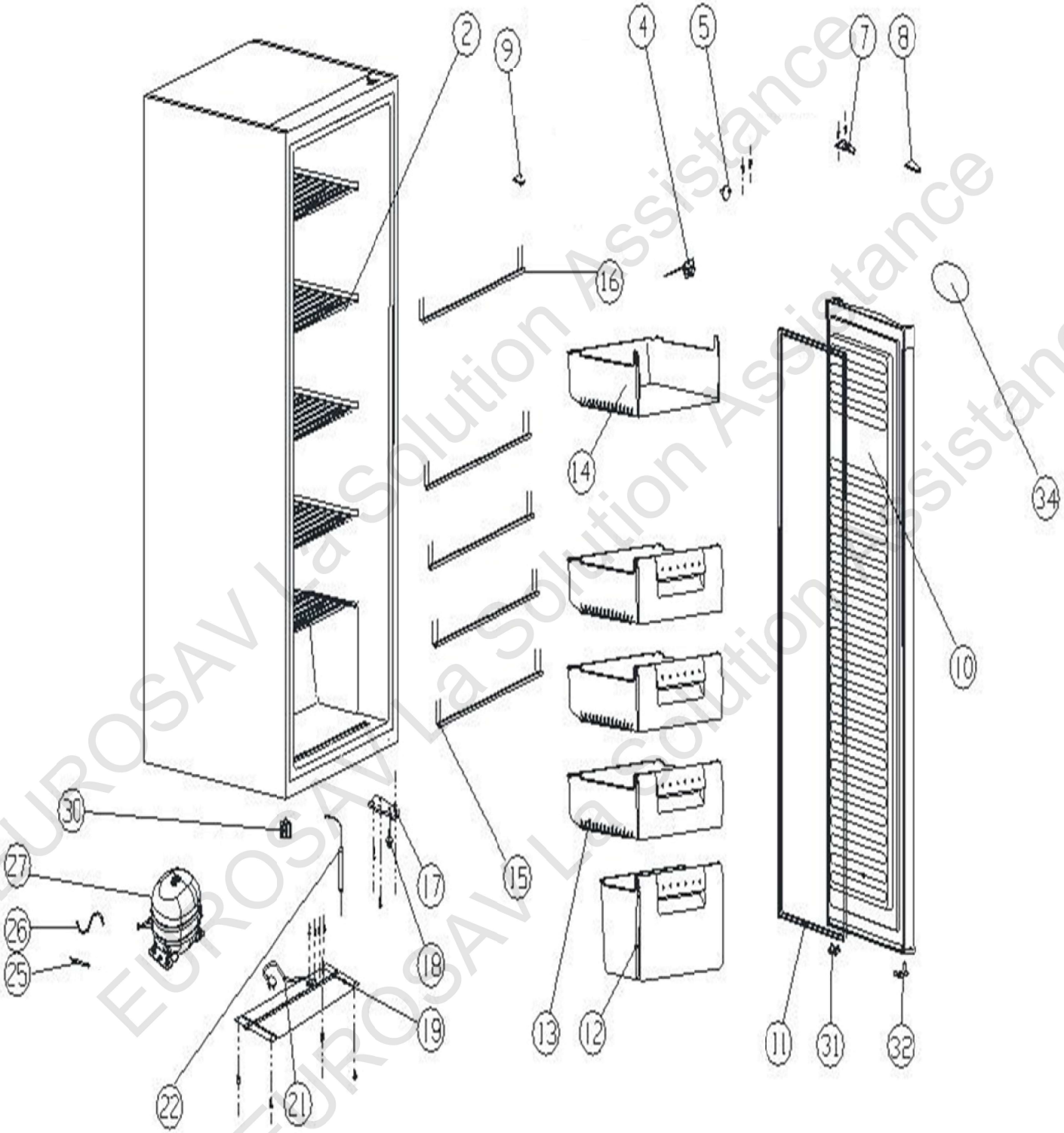


EUROSAV La Solution Assistance